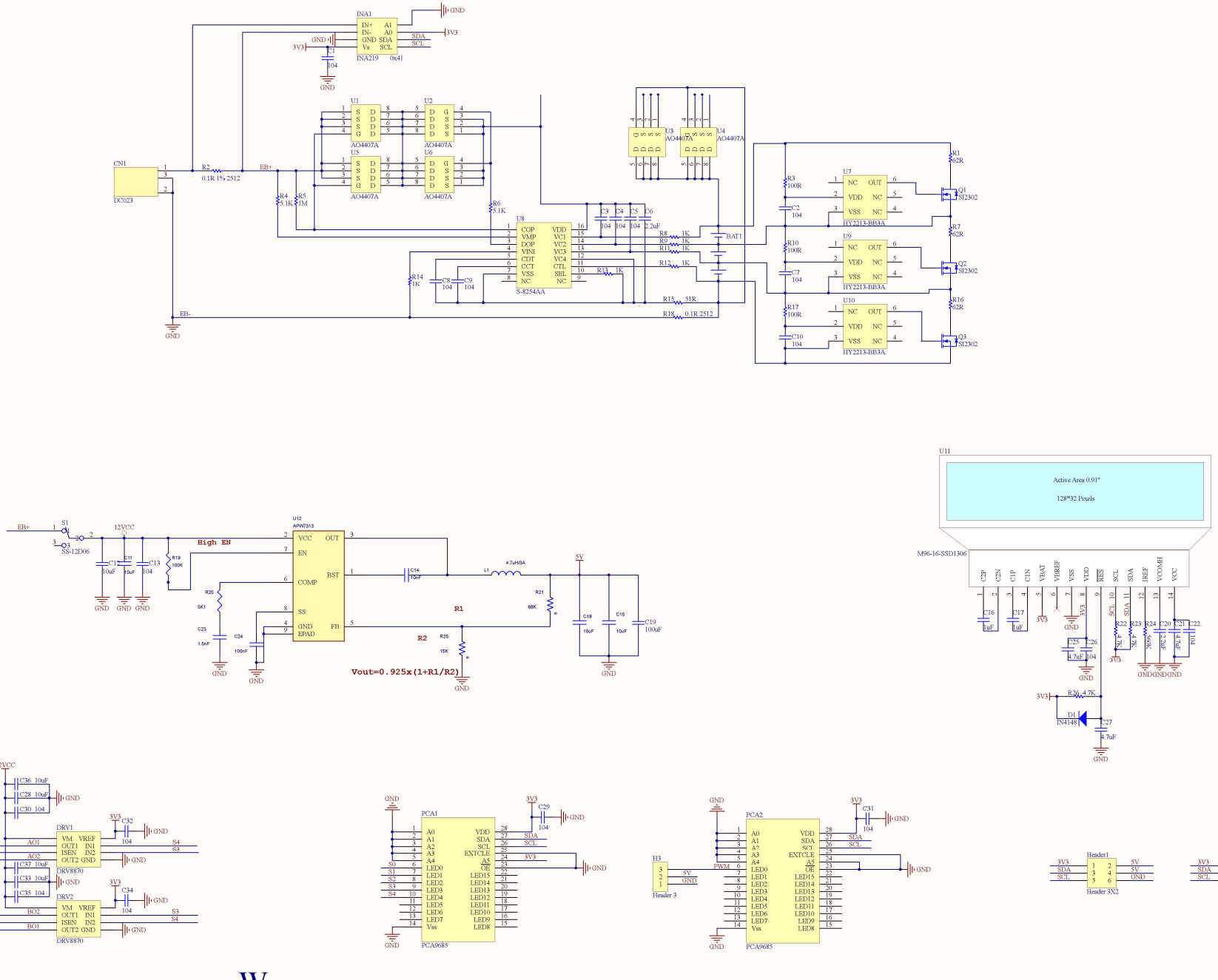
INA1
INA219
0x41
CN1
DC023
R2
0.1R 1% 2512
EB+
EB-
U1
U2
U5
U6
AO4407A
U3
U4
U8
S-8254AA
BAT1
U7
U9
U10
HY2213-BB3A
Q1
Q2
Q3
SI2302
R1
R7
R16
62R
R3
R10
R17
100R
R6
5.1K
R4
8.1K
R5
1M
R8
R9
R11
R12
R13
R14
R15
51R
R18
0.1R 2512
C3
C4
C5
C6
2.2uF
GND
3V3
SDA
SCL
S1
SS-12D06
12VCC
High EN
U12
APW7313
VCC
OUT
EN
BST
COMP
SS
GND
EPAD
FB
R19
100K
R20
5K1
C23
1.5nF
C24
100nF
C14
10nF
L1
4.7uH9A
5V
R21
68K
R22
15K
R1
R2
C18
10uF
C15
10uF
C19
100uF
Vout=0.925x(1+R1/R2)
U11
Active Area 0.91"
128*32 Pixels
M96-16-SSD1306
C2P
C2N
C1P
C1N
VBAT
VBREF
VSS
VDD
RES
SCL
SDA
IREF
VCOMH
VCC
C16
1uF
C17
1uF
R23
4.7K
R24
300K
C20
1uF
C21
4.7uF
C22
1uF
C25
4.7uF
C26
104
R26
4.7K
D1
IN4148
C27
4.7uF
H2
Header 2
H1
Header 2
DRV1
DRV2
DRV8870
VM
VREF
OUT1
IN1
ISEN
IN2
OUT2
GND
AO1
AO2
BO1
BO2
C36
10uF
C28
10uF
C30
104
C37
10uF
C33
10uF
C35
104
C32
104
C34
104
S4
S3
PCA1
PCA2
PCA9685
A0
A1
A2
A3
A4
LED0
LED1
LED2
LED3
LED4
LED5
LED6
LED7
Vss
VDD
SDA
SCL
EXTCLE
A5
OE
LED15
LED14
LED13
LED12
LED11
LED10
LED9
LED8
S0
S1
S2
S3
S4
C29
104
C31
104
H3
Header 3
PWM
Header1
Header2
Header 3X2
Wavesture